ORIGINAL INSTRUCTIONS >EN

PORTABLE SPOT CLEANER

RACSC750

USER GUIDE

CAUTION: Read the instruction manual before using this product!

CONTENTS

1. SAFETY INSTRUCTIONS....3
2. PRODUCT DESCRIPTION....5
3. INTENDED USE....6
4. TECHNICAL DATA....6
5. BEFORE STARTING THE APPLIANCE....7
6. OPERATION....7
7. CLEANING AND MAINTENANCE....8
8. TROUBLESHOOTING....10
9. DISPOSAL AND RECYCLING....10
10. DECLARATION OF CONFORMITY....11
11. WARRANTY....12
12. PRODUCT FAILURE....13
13. WARRANTY EXCLUSIONS....14

1. SAFETY INSTRUCTIONS

- Use water under 40°C in order to remove dirt from the unit .
- Do not use it to clean arts and crafts, fibers and items not suitable for cleaning by water, and surfaces easy to be hurt (like floor, table and so on) .
- Do not slant if with water in the tank to avoid wetting floor.
- Stop the appliance and empty the Used Water Tank if it reaches the MAX line.
- Make sure the floor cleaner used is not bad for your washed items.
- The appliance may stop when cleaning long hair carpet due to blocked air outlet. Stop the appliance if big quantity of foam or used water comes out and empty the Used Water Tank before use it again. Do not use foam detergent.
- Please make sure the users need assistance (including children) are under supervision when they use the appliance.
- Do not use liquid like pesticides, hair dyes and lubricant .
- Do not use to pick up any flammable or combustible objects or cigarettes.
- Do not use to pick up any oil or hot air, or dry dust .
- Do not use it if the hose is broken, avoid bending, stampede and pulling violently of the hose.

- Do not block the air outlet to avoid influence on the heat dissipation.
- Stop use it in case of any unusual noise and smell.
- Do not disassemble, repair and change the appliance's structure by yourself.
- Do not use it under the scene of heavy wind or rain.
- Do not immerse in water or liquid to avoid fire or electric shock hazard.
- Do not use to pick up any dust with infectious danger.
- Do not use without Used Water Tank in position.
- If the supply cord is damaged, it must be replaced by the manufacturer, its service agent or similarly qualified persons in order to avoid a hazard.
- This appliance can be used by children aged from 8 years and above and persons with reduced physical, sensory or mental capabilities or lack of experience and knowledge if they have been given supervision or instruction concerning use of the appliance in a safe way and understand the hazards involved. Children shall not play with the appliance. Cleaning and user maintenance shall not be made by children without supervision.
- This appliance may be normal used under 50Hz or 60Hz. The frequency need not to be adjusted.

USE THE POWER CORD AND PLUG PROPERLY

- Clean the plug from time to time.

- Plug in well when use it.
- Unplug the appliance if the appliance will not be used for a long time.
- Do not plug or unplug the appliance with wet hands.
- Keep the plug away from kids.
- Do not damage the power cord. Do not pull the plug violently when move the appliance.
- Do not use the appliance in case of damaged power cord or plug.
- Do not use overloaded socket.
- Do not use in case of any failures, cut the power and unplug the appliance.
- The plug must be removed from the socket-outlet before cleaning or maintaining the appliance.
- The hazard may occur if the appliance runs over the supply cord.

2. PRODUCT DESCRIPTION

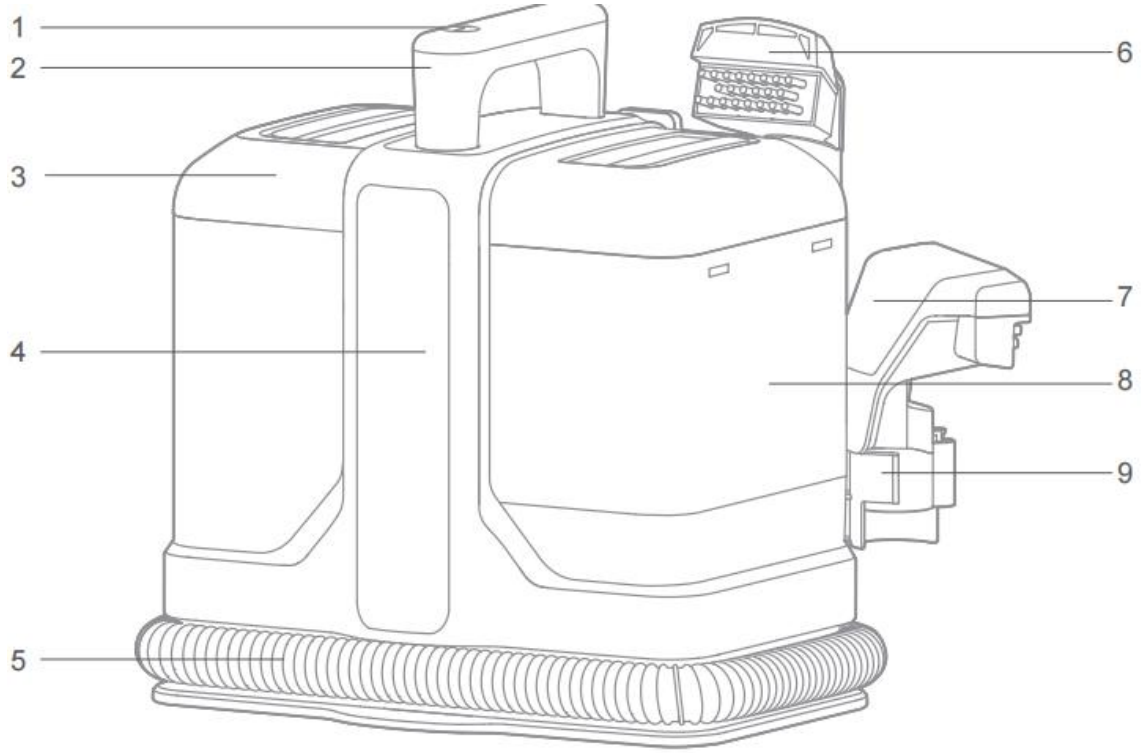

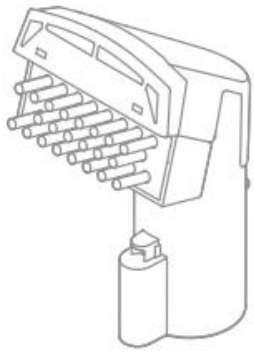

6

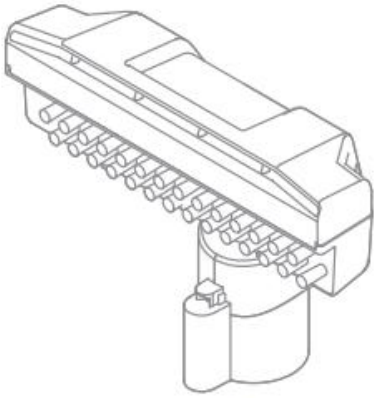

7

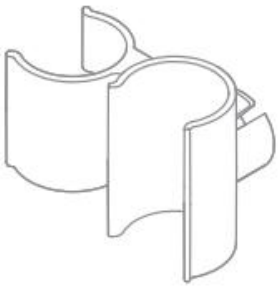

9

1) Switch
2) Handle
3) Dirty water tank
4) Spot cleaner
5) Hose
6) Small brush
7) Big brush
8) Clean water tank
9) Hook for brush

3. INTENDED USE

1) This appliance is mainly for wet using, do not use to pick up large quantity of dust.
2) The machine is to be used only for its prescribed purpose. Any other use is deemed to be a case of misuse. Please note that our appliance has not been designed for use in commercial or industrial applications.
3) Below matters are not allowed to be picked up:
   - Dry dust
   - Big quantity of powder
   - Big quantity of sand and stones
   - Big quantity of rubbish
   - Metal matters like needles, pins
   - Big polybag and stockings
   - Things easy to be dumped inside

4. TECHNICAL DATA

Model	RACSC750
Mains voltage:	220-240V~ 50/60Hz
Power input:	750W
Suction:	≧15 Kpa
INGRESS PROTECTION	IPX4
Capacity of clean water tank	1600 ml
Capacity of Dirty water tank	750 ml
Max air flow	≧11 l/s
Hose:	ø32mm, 1.2m
Power cable length:	5 m
Weight:	4,4 kg
Sound power noise	85 dB(A)

5. BEFORE STARTING THE APPLIANCE

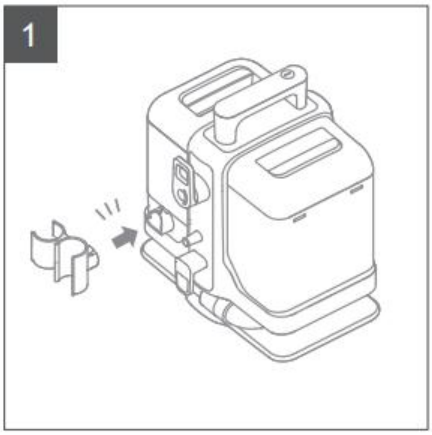

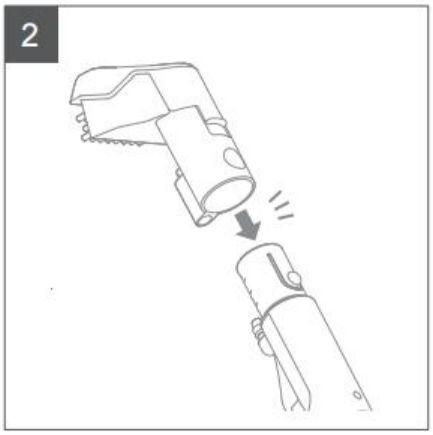

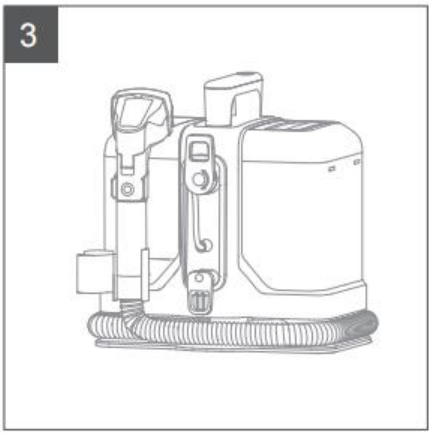

1) Insert the attachment holder into the appliance until you hear a click.
2) Insert the brush into the end of the extension hose until it clicks into place.
3) Wrap the hose around the appliance and insert it into the attachment holder.

6. OPERATION

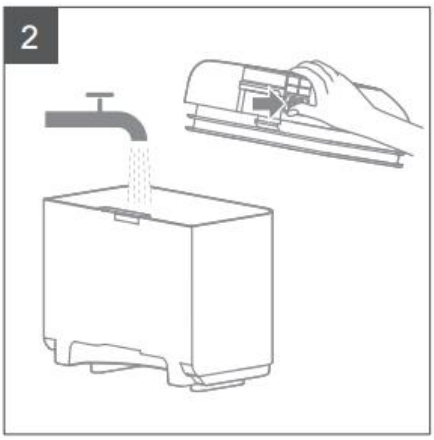

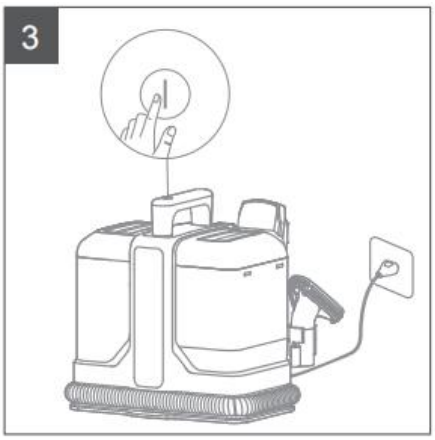

1) Remove the Clean Water Tank from the main body.
2) Remove the Clean Water Tank cover, Fill the tank with water to the "WATER" line on the tank.
3) Plug the power cord into the power socket and press the power switch to turn on.

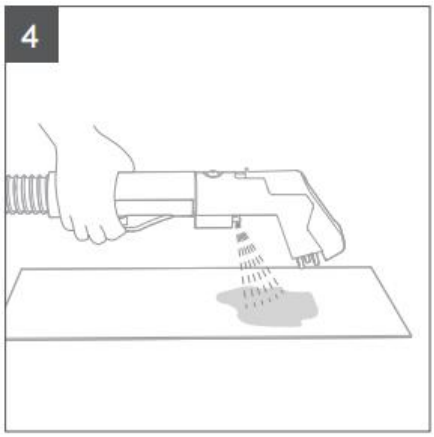

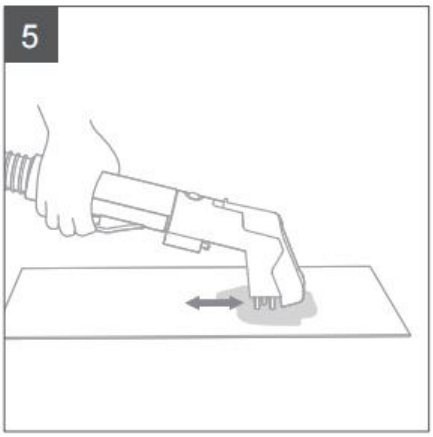

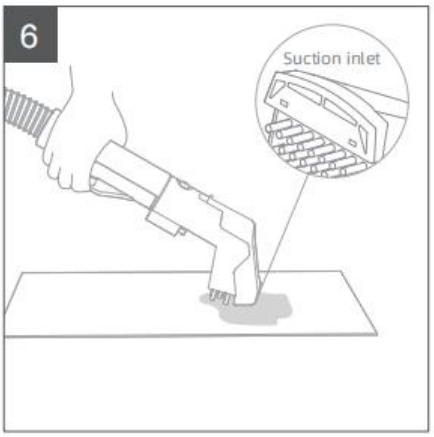

4) Press the water-spray button to spray water.
5) Use the brush back and forth to clean stains.
6) Firmly press the brush onto the stained area to suck the dirty water.

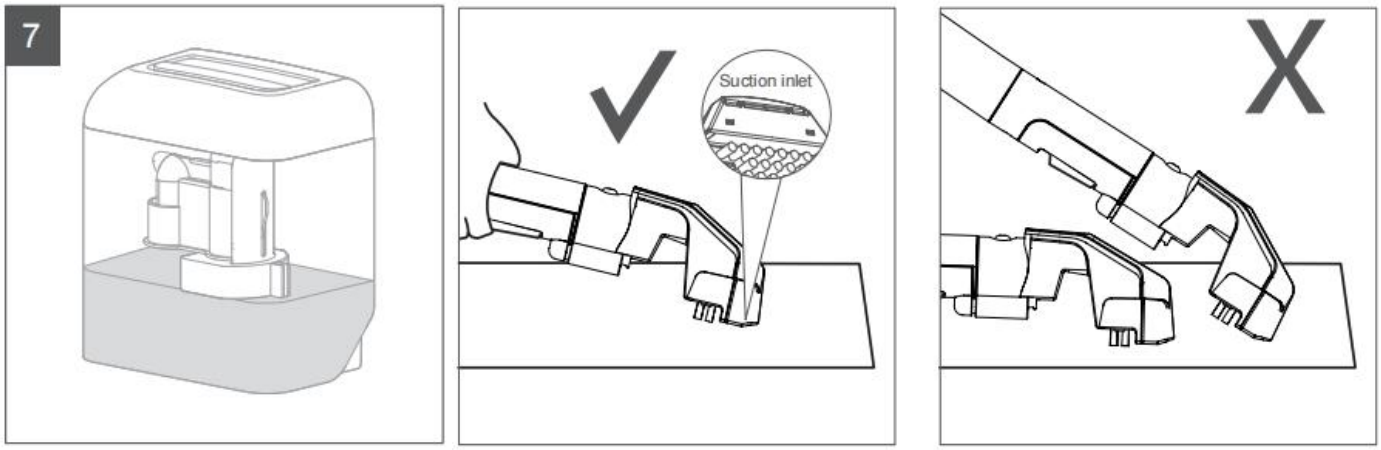

7) Empty the dirty water tank after every use or when the water level reaches the max fill line. The float inside will prevent suction if the tank is full.

IMPORTANT: Over or under tilting the hand tool may result in poor water pick up.

HOW TO CLEAN STUBBORN STAINS

Use fabric detergent (low-foam detergent) to clean stubborn stains. Make the water and detergent with a certain proportion (40:1) to fill the tank to the full line mark, and then install the clean water tank to the machine.

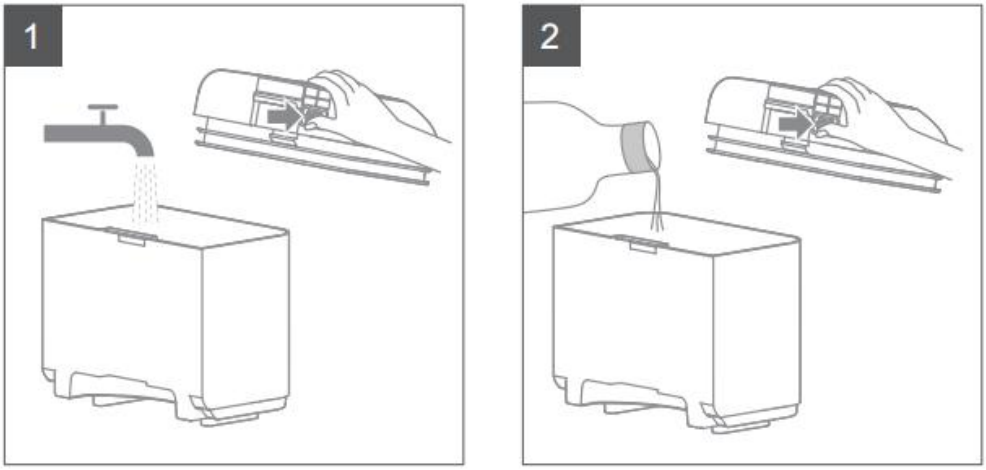

1) Open the water-in sealing pad, fill the clean water tank.
2) Put detergent into the tank.

7. CLEANING AND MAINTENANCE

To prolong the life of your spot & stain cleaner and prevent blockages or problems occurring follow this guide.

Always carry out cleaning when the product has been switched off for a short period of time.
CAUTION! never clean the cleaner or any parts of it whilst the plug is switched on at the mains.

This appliance can be cleaned by wiping a damp soft cloth to keep the outside free of dirt including dust. Use a dry cloth to clean the power cord.

To avoid unpleasant damp smells clean both tanks and ensure they are fully air dried before storing and after every use.

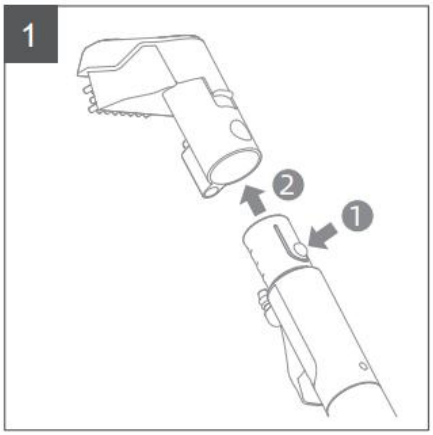

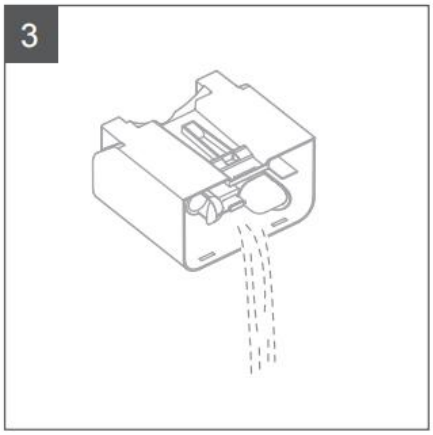

1) Press the brush release button and remove the standard stain brush.
2) Press the clean Water Tank release button to take out the tank.
3) Open the tank cover and pour outer the water.

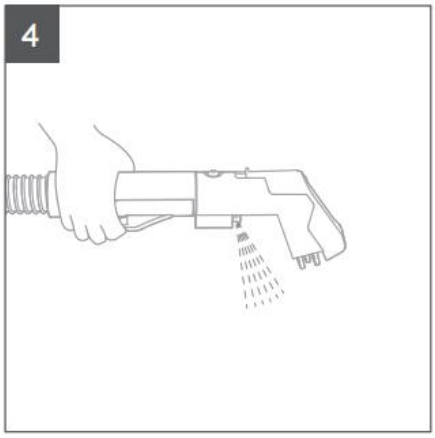

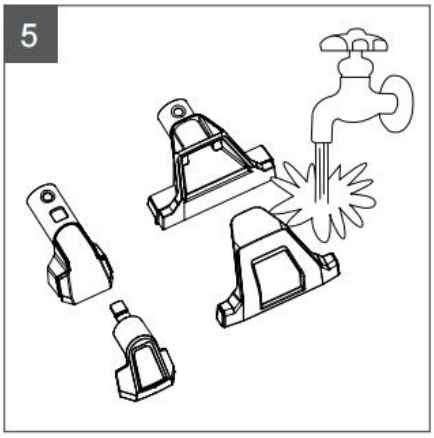

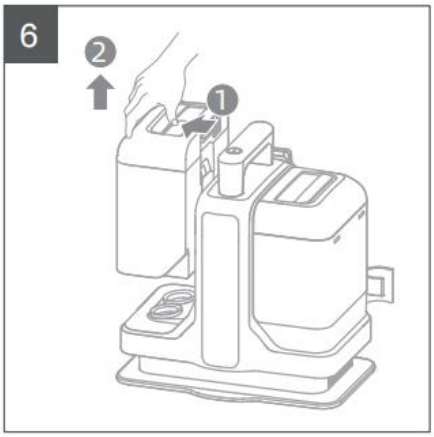

4) Re-install the empty clean water tank and ower on, press the water-spray button to remove any excess water from the tank.
5) Remove the wash tool brush cover to clean by rinsing under the tap. To replace; place cover into position on the wash tool until it clicks into place.
6) Press the Used Water Tank release button to take out the tank. Pull up the tank cover and pour out the used water.

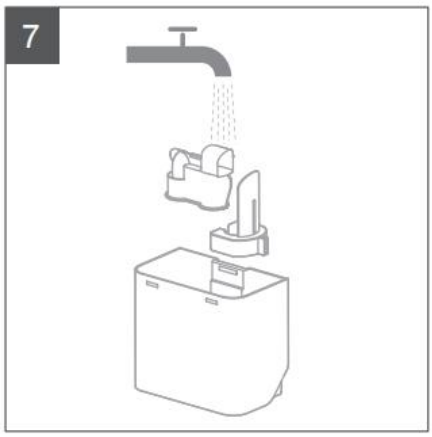

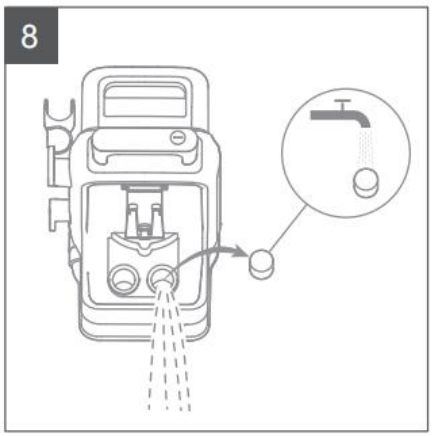

7) Rinse the Used Water Tank with clean water.
8) Remove the filter from the Used Water Tank to clean. Reinstall the tank cover and the tank.
9) Wipe the appliance with a dry cloth or wet tissue.

8. TROUBLESHOOTING

PRECAUTIONS TO SOME FAILURES

- This appliance is mainly for wet using, do not use to pick up large quantity of dust.
- Dry the Used Water Tank, clean water tank and inside of the hose if the temperature is extremely low to avoid freezing.
- Take out foreign matters from the hose when blocked before use it again.

Fault	Possible Reasons	Messures
No working after turning on	● The plug is not well plugged ● The cord is damaged	Turn if off, plug in well, or consult the service agent via hotline
No water comes out or little water comes out after pressing the water-spray button	● Spray water mouth is blocked ● The handle or the pump has been damaged	Take out the brush, wash the spray water mouth or consult the service agent via hotline.
No suction or weak suction power	● The machine is not on ● The dirty water tank is full ● The hose is not in good status ● The wind-in sponge is blocked	Turn on the power. Clean the dirty water tank to use it again. Check the hose to make sure it is in well status. Clean or change the sponge.

9. DISPOSAL AND RECYCLING

The equipment is supplied in packaging to prevent it from being damaged in transit. The raw materials in this packaging can be reused or recycled. The equipment and its accessories are made of various types of material, such as metal and plastic.

Defective components must be disposed of as special waste. Ask your dealer or your local council.

Old devices must not be disposed of with household waste!

This symbol indicates that this product must not be disposed of together with domestic waste in compliance with the Directive (2012/19/EU) pertaining to waste electrical and electronic equipment (WEEE). This product must be disposed of at a designated collection point. This can occur, for example, by handing it in at an authorised collecting point for the recycling of waste electrical and electronic equipment. Improper handling of waste equipment may have negative consequences for the environment and human health due to potentially hazardous substances that are often contained in electrical and electronic equipment.

By properly disposing of this product, you are also contributing to the effective use of natural resources. You can obtain information on collection points for waste equipment from your municipal administration, public waste disposal authority, an authorized body for the disposal of waste electrical and electronic equipment or your waste disposal company.

10. DECLARATION OF CONFORMITY

SODILOG SAS
4 RUE CURIE, CS 91617 68016 COLMAR CEDEX FRANCE

States that the designated below machine :
PORTABLE SPOT CLEANER
Model: RACSC750

S/N: 20250310461-20250311560

is in conformity with the essential requirements and other relevant provisions of the applicable European Directives, based on the application of European harmonized standards. Any unauthorized modification of the apparatus voids this declaration.

Satisfies the requirement of the Council Directives:
Low Voltage Directive 2014/35/EU
EC Directive of Electromagnetic Compatibility 2014/30/EU
Rohs Directive 2011/65/EU &（EU）2015/863
and conforms with the norms:
EN IEC 60335-2-2:2023+ A11: 2023
EN 60335-2-10: 2003 +A1:2008
EN 60335-1:2012+A11:2014+A13:2017+A1:2019+A2:2019+A14:
2019 + A15: 2021+A16:2023
EN 62233:2008
EN IEC 55014-1:2021
EN IEC 55014-2:2021
EN IEC 61000-3-2:2019+A1:2021
EN 61000-3-3:2013+A1:2019+A2:2021

Responsible of technical file : M. Olivier Patriarca
COLMAR CEDEX，05/03/2025

Jacques Masson/PDG

11. WARRANTY

The manufacturer guarantees the product against defects in material and workmanship for a period of 5 years from the date of the original purchase. It can be extended by one year if the user subscribes to website of myswap. The warranty only applies if the product is for household use. The warranty does not cover breakdowns due to normal wear and tear.

The manufacturer agrees to replace parts identified as defective by the designated distributor. The manufacturer does not accept responsibility for the replacement of the machine, in whole or in part, and/or ensuing damage.

The warranty does not cover breakdowns due to:

insufficient maintenance.
abnormal assembly, adjustment or operations of the product.
parts subject to normal wear and tear.

The warranty does not extend to:

shipping and packaging costs.
using the tool for a purpose other than that for which it was designed.
the use and maintenance of the machine done in a manner not described in the user manual.

Due to our policy of continuous product improvement, we reserve the right to alter or change specifications without notice. Consequently, the product may be different from the information contained therein, but a modification will be undertaken without notice if it is recognized as an improvement of the preceding characteristic.

READ THE MANUAL CAREFULLY BEFORE USING THE MACHINE.

When ordering spare parts, please indicate the part number or code, you can find this in the spare parts list in this manual. Keep the purchase receipt; without it, the warranty is invalid. To help you with your product, we invite you to contact us by phone or via our website:

+33 (0)9.70.75.30.30
https://services.swap-europe.com/contact

You must create a "ticket" via the web platform.

Register or create your account.
Indicate the reference of the tool.
Choose the subject of your request.
Describe your problem.
Attach these files: invoice or sales receipt, photo of the identification plate (serial number), photo of the part you need (for example: pins on the transformer plug which are broken).

12. PRODUCT FAILURE

WHAT TO DO IF MY MACHINE BREAKS DOWN?

If you bought your product in a store:

- Make sure that your machine is complete with all accessories supplied, and clean! If this is not the case, the repairer will refuse the machine.
- Go to the store with the complete machine and with the receipt or invoice.

If you bought your product on a website:

- Make sure that your machine is complete with all accessories supplied, and clean! If this is not the case, the repairer will refuse the machine.
- Create a SWAP-Europe service ticket on the site: https://services.swap-europe.com When making the request on SWAP-Europe, you must attach the invoice and the photo of the nameplate (serial number).

Contact the repair station to make sure it is available before dropping off the machine.

Go to the repair station with the complete machine packed, accompanied by the purchase invoice and the station support sheet downloadable after the service request is completed on the SWAP-Europe site

Please keep your original packaging to allow for after-sales service returns or pack your machine with a similar cardboard box of the same dimensions.

For any question concerning our after-sales service you can make a request on our website https://services.swap-europe.com

Our hotline remains available at +33 (9) 70 75 30 30.

13. WARRANTY EXCLUSIONS

THE WARRANTY DOES NOT COVER:

- Start-up and setting up of the product.
- Damage resulting from normal wear and tear of the product.
- Damage resulting from improper use of the product.
- Damage resulting from assembly or start-up not in accordance with the user manual.
- Periodic and standard maintenance events.
- Actions of modification and dismantling that directly void the warranty.
- Products whose original authentication marking (brand, serial number) has been degraded, altered or withdrawn.
- Replacement of consumables.
- The use of non-original parts.
- Breakage of parts following impacts or projections.
- Accessories breakdowns.
- Defects and their consequences linked to any external cause.
- Loss of components and loss due to insufficient screwing.
- Cutting components and any damage related to the loosening of parts.
- Overload or overheating.
- Poor power supply quality: faulty voltage, voltage error, etc.
- Damages resulting from the deprivation of enjoyment of the product during the time necessary for repairs and more generally the costs related to the immobilization of the product.
- The costs of a second opinion established by a third party following an estimate by a SWAP-Europe repair station
- The use of a product which would show a defect or a breakage which was not the subject of an immediate report and/or repair with the services of SWAP-Europe.
- Deterioration linked to transport and storage*.

* In accordance with transport legislation, damage related to transport must be declared to carriers within 48 hours maximum after observation by registered letter with acknowledgement of receipt.
This document is a supplement to your notice, a non-exhaustive list.
Attention: all orders must be checked in the presence of the delivery person. In case of refusal by the delivery person, it you must simply refuse the delivery and notify your refusal.
Reminder: the reserves do not exclude the notification by registered letter with acknowledgement within 72 hours.
Information:
Thermal devices must be wintered each season (service available on the SWAP-Europe site). Batteries must be charged before being stored.

SODILOG SAS
4 RUE CURIE, CS 91617 68016 COLMAR CEDEX FRANCE
Made in PRC